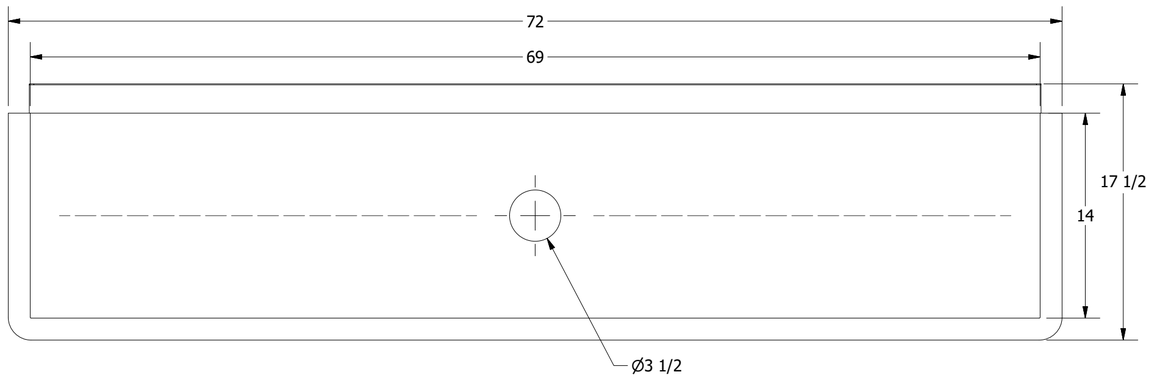

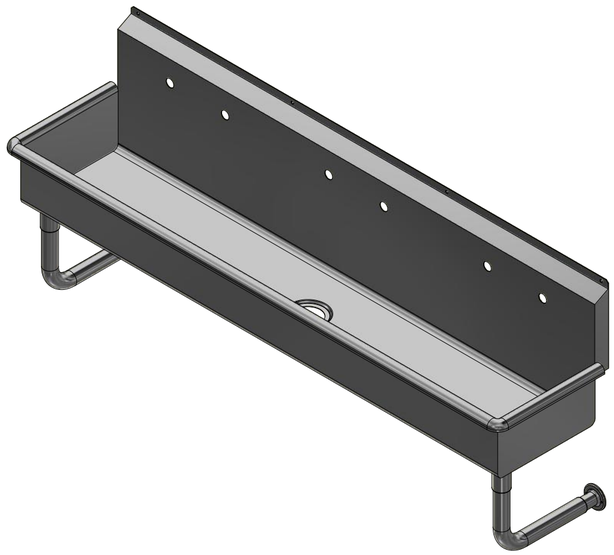

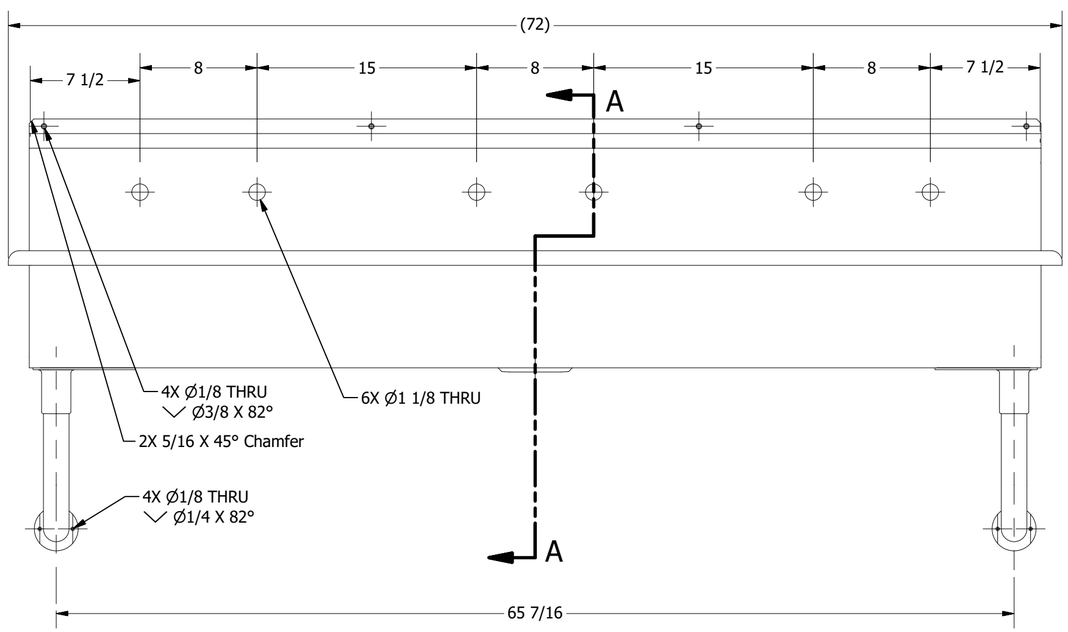

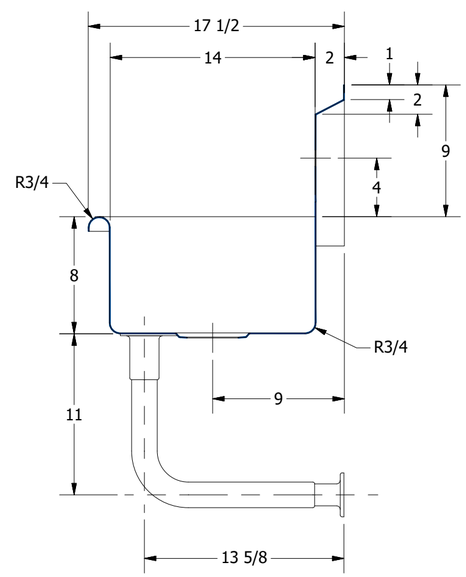

SECTION A-A
SCALE 1/8

REV	DESCRIPTION	DATE	APPROVED

REVISION HISTORY

griffin PRODUCTS INC.
303 Blue Bird Parkway
Wills Point, Texas 75169
(800) 379-9709 /Fax: (903) 873-6389
www.gpsink.com

THE INFORMATION CONTAINED IN THIS DRAWING IS THE SOLE PROPERTY OF GRIFFIN PRODUCTS, INC. ANY REPORDUCTION IN PART OR AS A WHOLE WITHOUT THE WRITTEN PERMISSION FROM GRIFFIN PRODUCTS, INC. IS PROHIBITED.

PART NUMBER	BL.372.128
PRODUCT CATEGORY	MULTISTATION SINK
TITLE	BLANCO SERIES MULTISTATION SINK
DESCRIPTION	3 STATIONS, WITH WALL FAUCET MULTISTATION SINK
MATERIAL	16GA (0.06 in) 304 STAINLESS STEEL
ALL DIMENSIONS ARE IN X INCHES	
DRW. BY / DATE	DNZ 01/24/18
APPROVED BY / DATE	
REV.	
SCALE	1/8
SIZE	C
SHEET	1 / 1