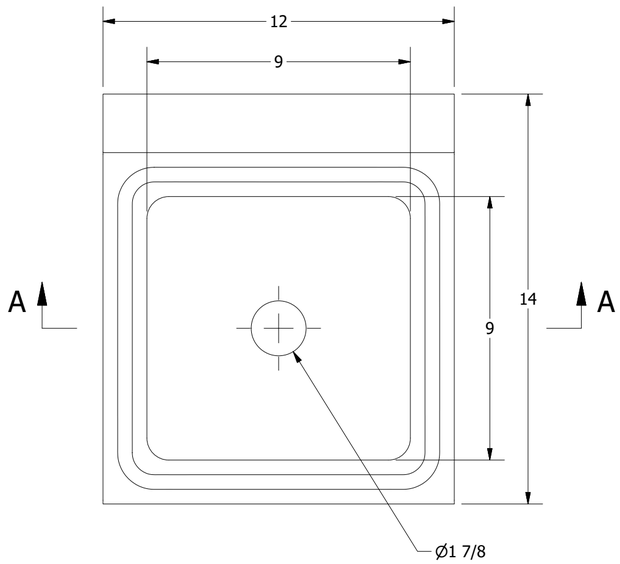

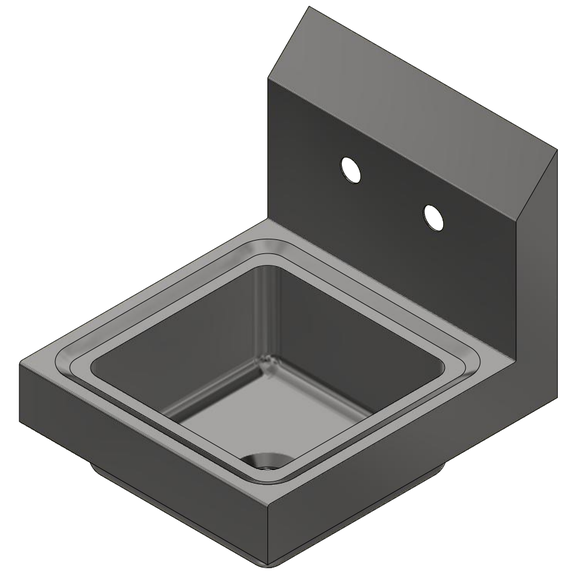

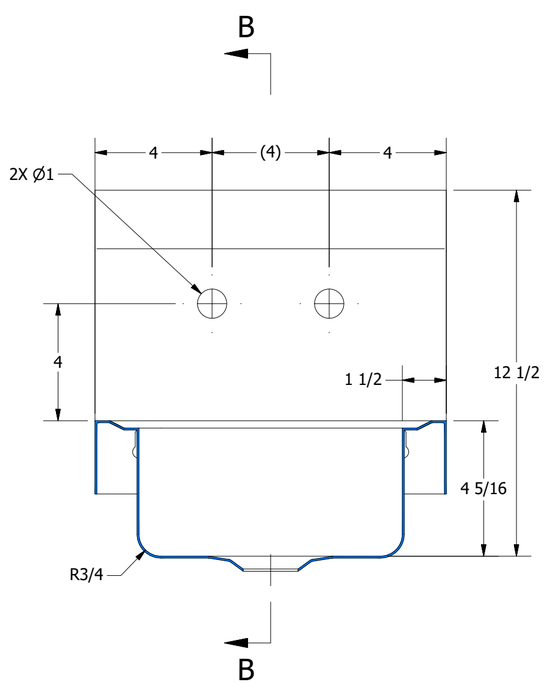

SECTION A-A
SCALE 1 / 4

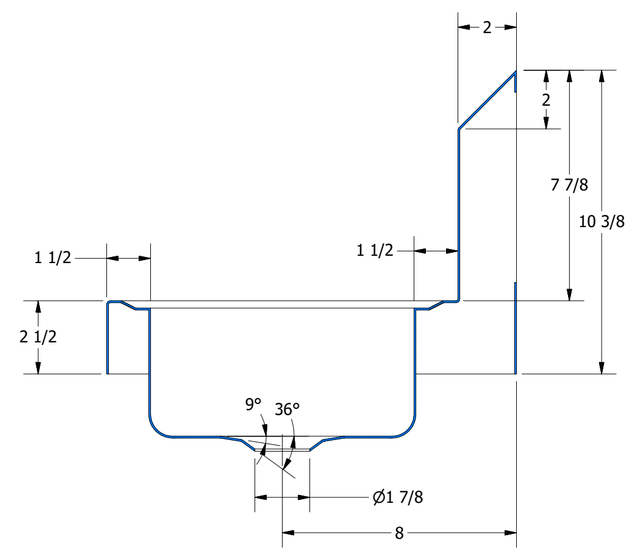

SECTION B-B
SCALE 1 / 4

REV	DESCRIPTION	DATE	APPROVED

REVISION HISTORY

griffin PRODUCTS INC.
303 Blue Bird Parkway
Wills Point, Texas 75169
(800) 379-9709 /Fax: (903) 873-6389
www.gpsink.com

THE INFORMATION CONTAINED IN THIS DRAWING IS THE SOLE PROPERTY OF GRIFFIN PRODUCTS, INC. ANY REPORDUCTION IN PART OR AS A WHOLE WITHOUT THE WRITTEN PERMISSION FROM GRIFFIN PRODUCTS, INC. IS PROHIBITED.

PART NUMBER	**CM.20.124**
TITLE	COMAL HANDSINK
PRODUCT CATEGORY	HANDWASH SINK
DESCRIPTION	20GA. SINK W. WALL MOUNTED FAUCET
MATERIAL	
ALL DIMENSIONS ARE IN X INCHES	
DRW. BY / DATE	DNZ 01/24/18
APPROVED BY / DATE	
REV.	
SCALE	1 / 4
SIZE	C
SHEET	1 / 1